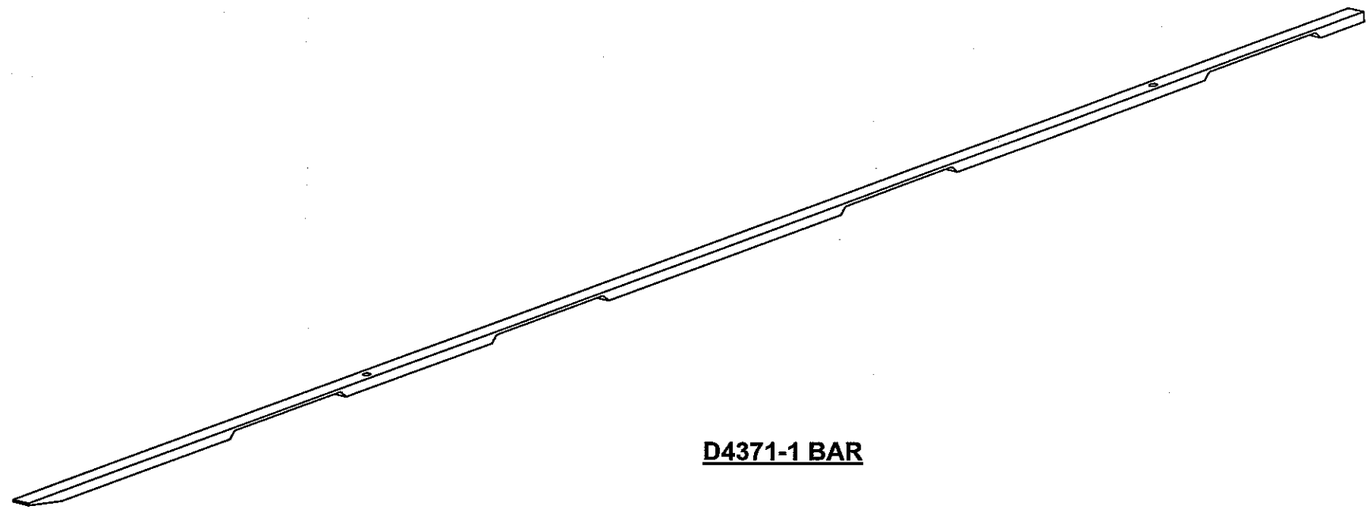

D4371-1 BAR

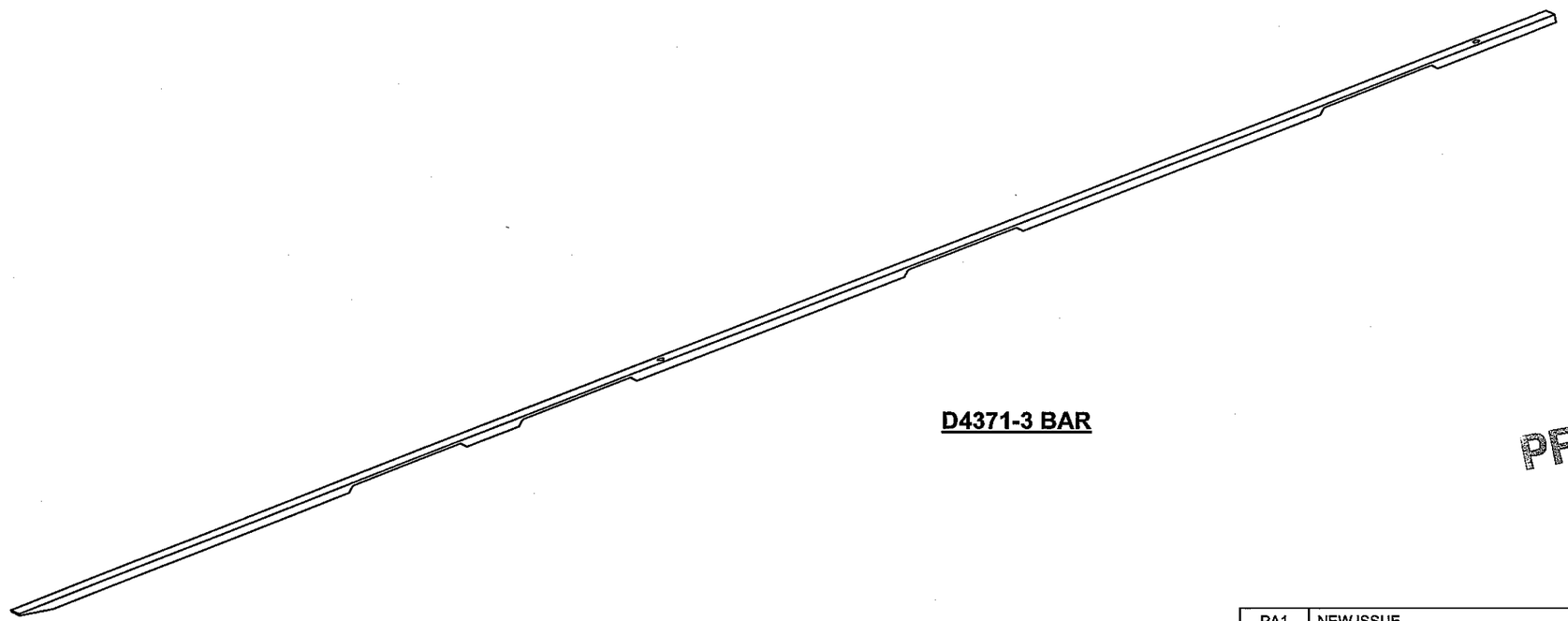

D4371-3 BAR

PRELIMINARY ISSUE

REV.	DESCRIPTION	BY	DATE
PA1	NEW ISSUE	SC	11.03.24

DESIGN	SC	**DART AEROSPACE USA, INC.** PORT HADLOCK, WA
DRAWN	SC	
CHECKED		DRAWING NO. D4371 — REV. PA1 — SHEET 1 OF 2
MFG. APPR.		
APPROVED		TITLE BAR — SCALE NTS
DE APPR.		
DATE	11.03.24	

COPYRIGHT © 2011 BY DART AEROSPACE USA INC.
THIS DOCUMENT IS PRIVATE AND CONFIDENTIAL AND IS SUPPLIED ON THE EXPRESS CONDITION THAT IT IS NOT TO BE USED FOR ANY PURPOSE OR COPIED OR COMMUNICATED TO ANY OTHER PERSON WITHOUT WRITTEN PERMISSION FROM DART AEROSPACE USA INC.

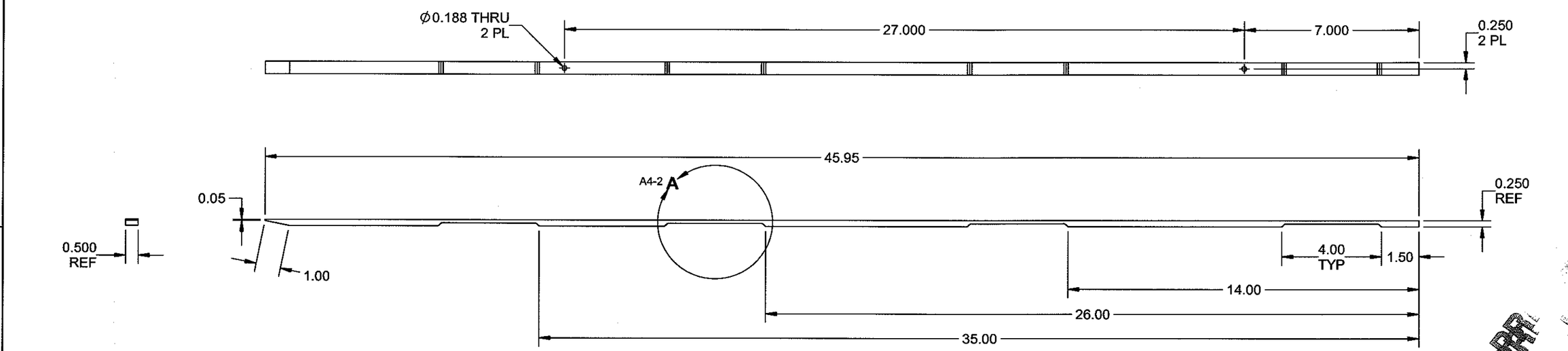

D4371-1 BAR

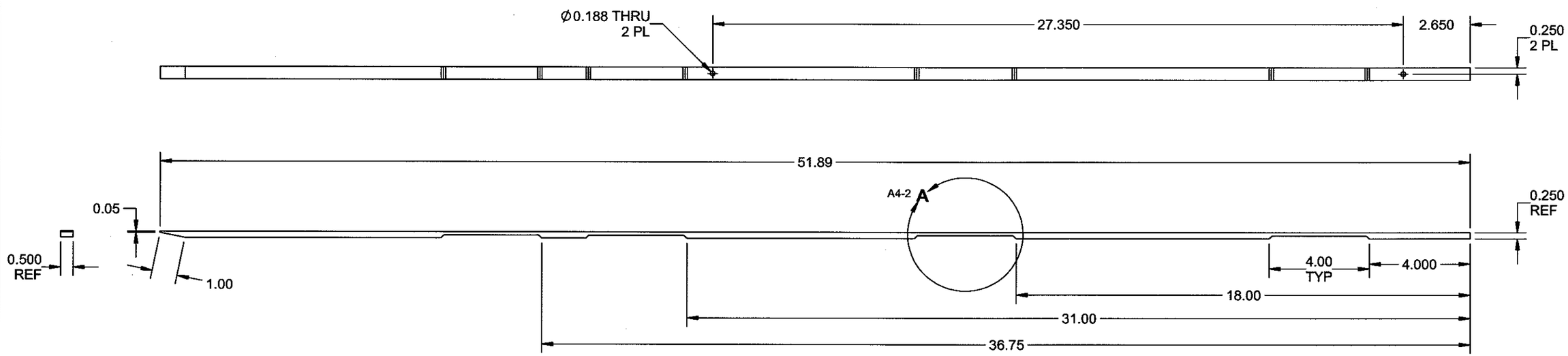

D4371-3 BAR

NOTES:
1) MATERIAL: AISI 304/316 STAINLESS STEEL BAR. 0.250 THICK X 0.500 WIDTH
PER ASTM A276 OR ASTM A240
REF. DART SPEC. M304B0.250X00.500
2) FINISH: NONE
3) TOLERANCES: PER DART QSI 018 UNLESS OTHERWISE NOTED
4) UNITS: INCHES UNLESS OTHERWISE NOTED
5) BREAK SHARP EDGES: 0.005 TO 0.010 MAX
6) IDENTIFICATION: NONE
7) WEIGHT: D4371-1 = 1.37 lbs
D4371-3 = 1.59 lbs

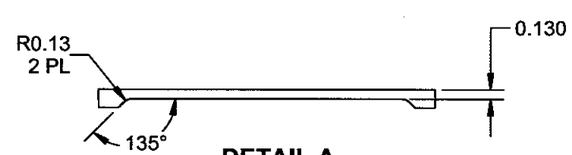

DETAIL A
TYP
B4-2
D5-2

DESIGN	SC	**DART AEROSPACE USA, INC.** PORT HADLOCK, WA
DRAWN	SC	
CHECKED		DRAWING NO. D4371 — REV. PA1
MFG. APPR.		SHEET 2 OF 2
APPROVED		TITLE BAR — SCALE NTS
DE APPR.		
DATE	11.03.24	

COPYRIGHT © 2011 BY DART AEROSPACE USA INC.
THIS DOCUMENT IS PRIVATE AND CONFIDENTIAL AND IS SUPPLIED ON THE EXPRESS CONDITION THAT IT IS NOT TO BE USED FOR ANY PURPOSE OR COPIED OR COMMUNICATED TO ANY OTHER PERSON WITHOUT WRITTEN PERMISSION FROM DART AEROSPACE USA INC.

PRELIMINARY ISSUE